AW-CM467-SUR

IEEE 802.11 a/b/g/n/ac and Bluetooth 5.0 Module

Datasheet

Rev. A

DF

(For Standard)

FORM NO.: FR2-015_ A Responsible Department：WBU Expiry Date: Forever
The information contained herein is the exclusive property of AzureWave and shall not be distributed, reproduced, or disclosed in whole or in part without prior written permission of AzureWave.

Features

Wi-Fi

- Dual band 802.11 a/b/g/n/ac
- Single-stream spatial multiplexing up to 433.3 Mbps
- Supports 20, 40, and 80 MHz channels with optional SGI (256 QAM modulation).
- Security: WEP, WPA/WPA2 (personal), AES (HW), TKIP (HW), CKIP (software support)

Bluetooth

- Qualified for Bluetooth Core Specification 5.0 with all Bluetooth 4.2 optional features
- Supports extended synchronous connections (eSCO), for enhanced voice quality by allowing for retransmission of dropped packets.
- Adaptive Frequency Hopping (AFH) for reducing radio frequency interference
- Supports multiple simultaneous Advanced Audio Distribution Profiles (A2DP) for stereo sound.

The information contained herein is the exclusive property of AzureWave and shall not be distributed, reproduced, or disclosed in whole or in part without prior written permission of AzureWave.

AzureWave Technologies, Inc.

Revision History

Document NO: R2-2467-DST-04

Version	Revision Date	DCN NO.	Description	Initials	Approved
A	**2021/02/18**	**DCN020945**	● **Initial Version**	**JM.Pang**	**Chihhao Liao**

The information contained herein is the exclusive property of AzureWave and shall not be distributed, reproduced, or disclosed in whole or in part without prior written permission of AzureWave.

Table of Contents

Features **2**
Revision History **3**
Table of Contents **4**
1. Introduction **5**
1.1 Product Overview **5**
1.2 Block Diagram **6**
1.3 Specifications Table **7**
1.3.1 General 7
1.3.2 WLAN 7
1.3.3 Bluetooth 9
1.3.4 Operating Conditions 10
2. Pin Definition **11**
2.1 Pin Map **11**
2.2 Pin Table **12**
2.3 Host Configuration Interface Table **14**
3. Electrical Characteristics **15**
3.1 Absolute Maximum Ratings **15**
3.2 Recommended Operating Conditions **15**
3.3 Digital IO Pin DC Characteristics **16**
3.4 Host Interface **17**
3.4.1 SDIO Interface 17
3.4.2 UART Interface 21
3.5 Power up Timing Sequence **23**
3.6 Power Consumption* **26**
3.6.1 WLAN 26
3.6.2 Bluetooth 26
4. Mechanical Information **27**
4.1 Mechanical Drawing **27**
5. Packaging Information **28**

The information contained herein is the exclusive property of AzureWave and shall not be distributed, reproduced, or disclosed in whole or in part without prior written permission of AzureWave.

1. Introduction

1.1 Product Overview

The Cypress AW-CM467-SUR device provides the highest level of integration for embedded and IoT wireless systems with integrated single-stream IEEE 802.11a/b/g/n/ac, MAC/baseband/radio and Bluetooth 5.0 (Basic Rate, Enhanced Data Rate and Bluetooth Low Energy).

AW-CM467-SUR supports all rates specified in the IEEE 802.11 a/b/g/n/ac specifications. IEEE 802.11ac's 256-QAM is supported for MCS8 in 20 MHz channels and MCS8/MCS9 in 40 MHz & 80 MHz channels to enable data rates of up to 433.3 Mbps. Included on-chip are 2.4 GHz and 5 GHz power amplifiers and low-noise amplifiers.

The WLAN section supports the following host interface options: an SDIO v3.0 interface that can operate in 4b or 1b mode and a USB 2.0 interface. The Bluetooth section supports USB 2.0, USB 1.1, SDIO and a high-speed 4-wire UART interface. An on-chip USB 2.0 hub provides a shared single USB connection to both WLAN and Bluetooth target devices.

Using advanced design techniques and process technology to reduce active and idle power, the AW-CM467-SUR is designed to address the need of mobile devices that require minimal power consumption and compact size. It includes a power management unit (PMU) which simplifies the system power topology and allows for direct operation from a mobile platform battery while maximizing battery life.

The AW-CM467-SUR implements highly sophisticated enhanced collaborative coexistence hardware mechanisms and algorithms, which ensure that WLAN and Bluetooth collaboration is optimized for maximum performance. As a result, enhanced overall quality for simultaneous voice, video, and data transmission on an embedded and IoT system is achieved.

The information contained herein is the exclusive property of AzureWave and shall not be distributed, reproduced, or disclosed in whole or in part without prior written permission of AzureWave.

1.2 Block Diagram

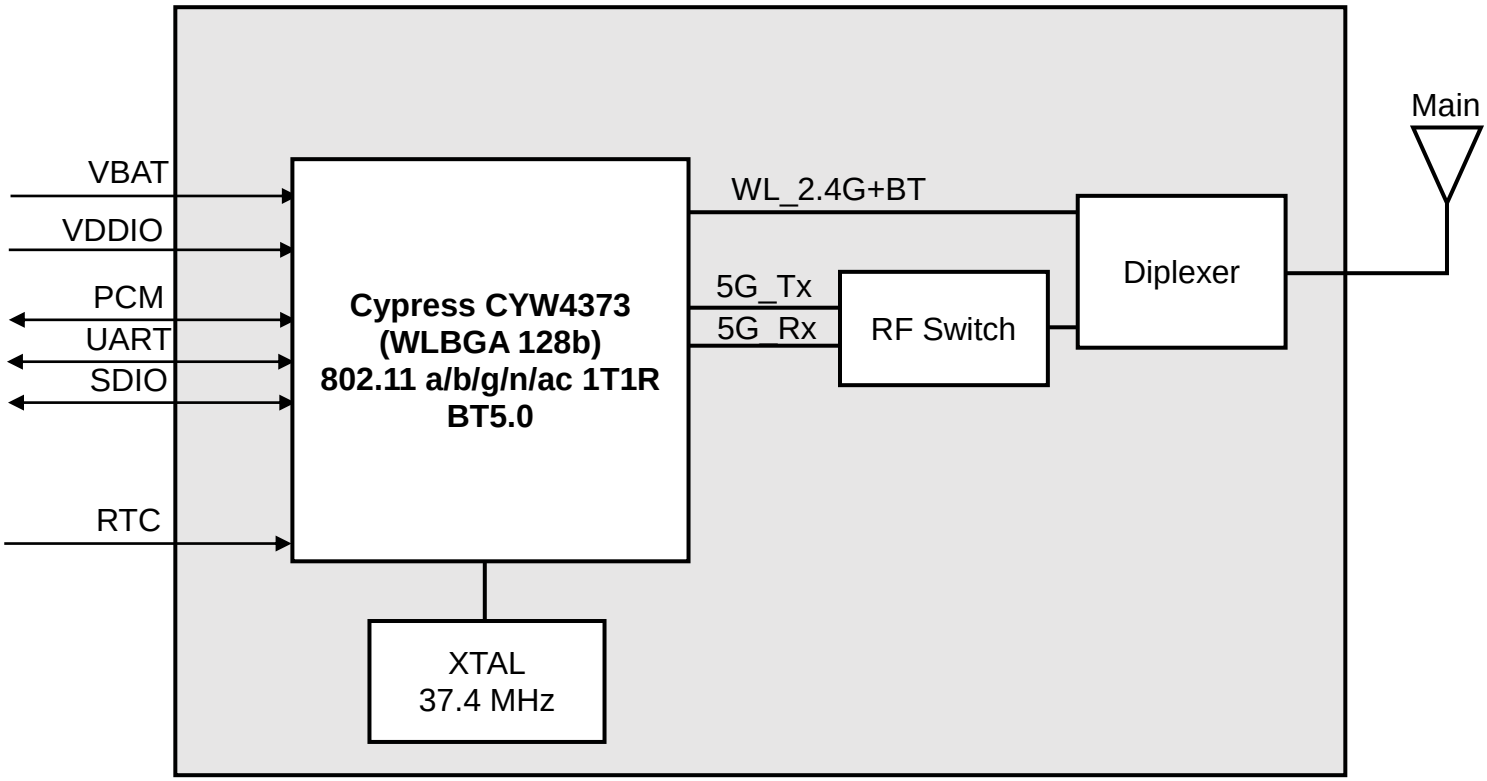

AW-CM467-SUR BLOCK DIAGRAM

The information contained herein is the exclusive property of AzureWave and shall not be distributed, reproduced, or disclosed in whole or in part without prior written permission of AzureWave.

1.3 Specifications Table

1.3.1 General

Features	Description
Product Description	IEEE 802.11 a/b/g/n/ac Wireless LAN and Bluetooth Module
Major Chipset	Cypress CYW4373
Host Interface	WiFi + BT ● SDIO + UART *For Host configuration interface, please refer to section 2.3
Dimension	12mm(L) x 12mm(W) x 1.65mm(T)
Form Factor	LGA module, 47 pins
Antenna	1T1R ANT1(Main)：WiFi/Bluetooth → TX/RX
Weight	TBD

1.3.2 WLAN

Features	Description
WLAN Standard	IEEE 802.11a/b/g/n/ac 1T1R
WLAN VID/PID	N/A
WLAN SVID/SPID	N/A
Frequency Rage	WLAN: 2.4 GHz / 5GHz Band
Modulation	DSSS DBPSK(1Mbps), DQPSK(2Mbps), CCK(11/5.5Mbps) OFDM BPSK(9/6Mbps/MCS0), QPSK(18/12Mbps/MCS1~2), 16-QAM(36/24Mbps/MCS3~4), 64-QAM(72.2/54/48Mbps/MCS5~7), 256-QAM(MCS8~9)
Number of Channels	802.11b: USA, Canada and Taiwan – 1 ~ 11 Most European Countries – 1 ~ 13 Japan – 1 ~ 13 802.11g:

The information contained herein is the exclusive property of AzureWave and shall not be distributed, reproduced, or disclosed in whole or in part without prior written permission of AzureWave.

<table>
<tr><td></td><td>USA and Canada – 1 ~ 11
Most European Countries – 1 ~ 13
802.11n:
USA and Canada – 1 ~ 11
Most European Countries – 1 ~ 13
802.11a:
USA – 36, 40, 44, 48, 52, 56, 60, 64, 100, 104, 108, 112, 116, 120, 124, 128, 132, 136, 140, 149, 153, 157, 161, 165</td></tr>
<tr><td>Output Power</td><td>2.4G
<table>
<tr><td></td><td>Min</td><td>Typ</td><td>Max</td><td>Unit</td></tr>
<tr><td>11b (11Mbps)
@EVM<35%</td><td>TBD</td><td>TBD</td><td>TBD</td><td>dBm</td></tr>
<tr><td>11g (54Mbps)
@EVM≦-25 dB</td><td>TBD</td><td>TBD</td><td>TBD</td><td>dBm</td></tr>
<tr><td>11n (HT20 MCS7)
@EVM≦-27 dB</td><td>TBD</td><td>TBD</td><td>TBD</td><td>dBm</td></tr>
<tr><td>11n (HT40 MCS7)
@EVM≦-27 dB</td><td>TBD</td><td>TBD</td><td>TBD</td><td>dBm</td></tr>
</table>
5G
<table>
<tr><td></td><td>Min</td><td>Typ</td><td>Max</td><td>Unit</td></tr>
<tr><td>11a (54Mbps)
@EVM≦-25 dB</td><td>TBD</td><td>TBD</td><td>TBD</td><td>dBm</td></tr>
<tr><td>11n (HT20 MCS7)
@EVM≦-27 dB</td><td>TBD</td><td>TBD</td><td>TBD</td><td>dBm</td></tr>
<tr><td>11n (HT40 MCS7)
@EVM≦-27 dB</td><td>TBD</td><td>TBD</td><td>TBD</td><td>dBm</td></tr>
<tr><td>11ac (VHT20 MCS8)
@EVM≦-30 dB</td><td>TBD</td><td>TBD</td><td>TBD</td><td>dBm</td></tr>
<tr><td>11ac (VHT40 MCS9)
@EVM≦-32 dB</td><td>TBD</td><td>TBD</td><td>TBD</td><td>dBm</td></tr>
<tr><td>11ac (VHT80 MCS9)
@EVM≦-32 dB</td><td>TBD</td><td>TBD</td><td>TBD</td><td>dBm</td></tr>
</table></td></tr>
<tr><td>Receiver Sensitivity</td><td>2.4G
<table>
<tr><td></td><td>Min</td><td>Typ</td><td>Max</td><td>Unit</td></tr>
<tr><td>11b (11Mbps)</td><td></td><td>TBD</td><td>TBD</td><td>dBm</td></tr>
<tr><td>11g (54Mbps)</td><td></td><td>TBD</td><td>TBD</td><td>dBm</td></tr>
<tr><td>11n (HT20 MCS7)</td><td></td><td>TBD</td><td>TBD</td><td>dBm</td></tr>
<tr><td>11n (HT40 MCS7)</td><td></td><td>TBD</td><td>TBD</td><td>dBm</td></tr>
</table>
5G(n/ac packets with LDPC)
<table>
<tr><td></td><td>Min</td><td>Typ</td><td>Max</td><td>Unit</td></tr>
<tr><td>11a (54Mbps)</td><td></td><td>TBD</td><td>TBD</td><td>dBm</td></tr>
<tr><td>11n (HT20 MCS7)</td><td></td><td>TBD</td><td>TBD</td><td>dBm</td></tr>
</table></td></tr>
</table>

The information contained herein is the exclusive property of AzureWave and shall not be distributed, reproduced, or disclosed in whole or in part without prior written permission of AzureWave.

	11n (HT40 MCS7)		TBD	TBD	dBm
	11ac (VHT20 MCS8)		TBD	TBD	dBm
	11ac (VHT40 MCS9)		TBD	TBD	dBm
	11ac (VHT80 MCS9)		TBD	TBD	dBm
Data Rate	802.11b: 1, 2, 5.5, 11Mbps 802.11g: 6, 9, 12, 18, 24, 36, 48, 54Mbps 802.11n: MCS0~7 HT20/HT40 802.11a: 6, 9, 12, 18, 24, 36, 48, 54Mbps 802.11ac: MCS0~8 VHT20 802.11ac: MCS0~9 VHT40/VHT80				
Security	● WPA™- and WPA2™- (Personal) support for powerful encryption and authentication ● AES and TKIP acceleration hardware for faster data encryption and 802.11i compatibility ● Wi-Fi Protected Setup (WPS) ● WEP ● CKIP(Software) ● WPA3				

* If you have any certification questions about output power please contact FAE directly.

1.3.3 Bluetooth

Features	Description				
Bluetooth Standard	Bluetooth 2.1+Enhanced Data Rate (EDR)/BT3.0/BT4.2/BT5.0				
Bluetooth VID/PID	N/A				
Frequency Rage	2400~2483.5MHz				
Modulation	GFSK (1Mbps), Π/4DQPSK (2Mbps) and 8DPSK (3Mbps)				
Output Power		Min	Typ	Max	Unit
	Basic rate	TBD	TBD	TBD	dBm
	LE	TBD	TBD	TBD	dBm
Receiver Sensitivity		Min	Typ	Max	Unit
	DH5		TBD	TBD	dBm
	2DH5		TBD	TBD	dBm
	3DH5		TBD	TBD	dBm
	LE		TBD	TBD	dBm

The information contained herein is the exclusive property of AzureWave and shall not be distributed, reproduced, or disclosed in whole or in part without prior written permission of AzureWave.

1.3.4 Operating Conditions

Features	Description
Operating Conditions	
Voltage	3.2 V– 4.8 V
Operating Temperature	-20°C ~70°C
Operating Humidity	less than 85% R.H.
Storage Temperature	-40°C ~85°C
Storage Humidity	less than 60% R.H.
ESD Protection	
Human Body Model	TBD
Changed Device Model	TBD

The information contained herein is the exclusive property of AzureWave and shall not be distributed, reproduced, or disclosed in whole or in part without prior written permission of AzureWave.

2. Pin Definition

2.1 Pin Map

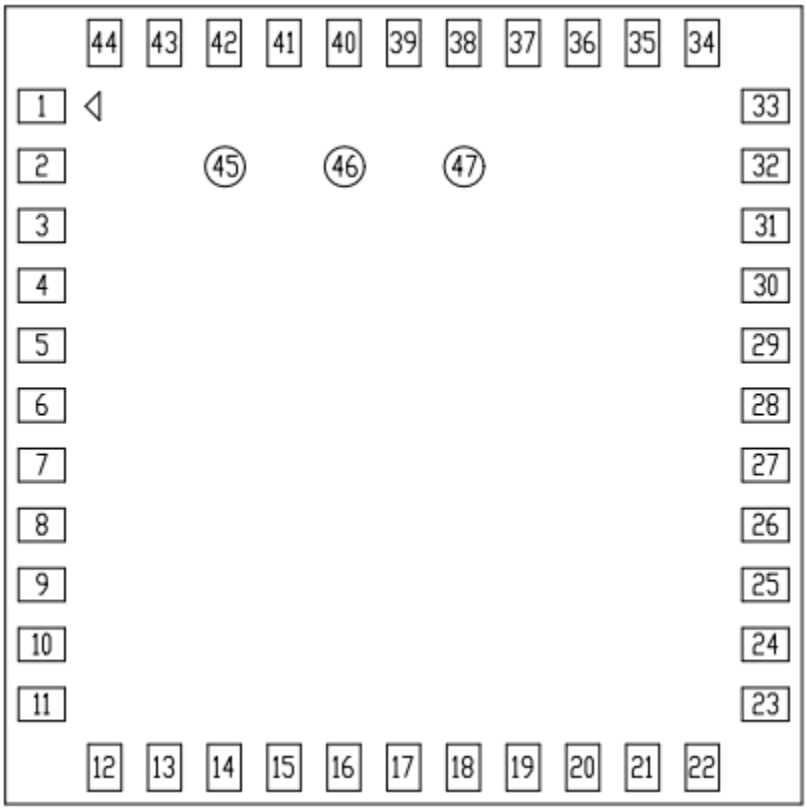

AW-CM467-SUR Top View Pin Map

The information contained herein is the exclusive property of AzureWave and shall not be distributed, reproduced, or disclosed in whole or in part without prior written permission of AzureWave.

2.2 Pin Table

Pin No	Definition	Basic Description	Voltage	Type
1	GND	Ground.		GND
2	WL_BT_ANT	WLAN/BT RF TX/RX path.		RF
3	GND	Ground.		GND
4	NC	Floating Pin, No connect to anything.		Floating
5	NC	Floating Pin, No connect to anything.		Floating
6	BT_DEV_WAKE	Bluetooth DEV_WAKE.	VDDIO	I/O
7	BT_HOST_WAKE	Bluetooth HOST_WAKE.	VDDIO	I/O
8	NC	Floating Pin, No connect to anything		Floating
9	VBAT	3.3V power pin	3.3V	VCC
10	NC	Floating Pin, No connect to anything.		Floating
11	NC	Floating Pin, No connect to anything.		Floating
12	WL_REG_ON	Used by PMU to power-up or power down the internal CYW4373 regulators used by the WLAN section. Also, when deasserted, this pin holds the WLAN section in reset. This pin has an internal 200 kΩ pull-down resistor that is enabled by default. It can be disabled through programming.	VDDIO	I
13	WL_HOST_WAKE	WL Host Wake.	VDDIO	O
14	SDIO_DATA2	SDIO Data Line 2.	VDDIO	I/O
15	SDIO_DATA3	SDIO Data Line 3.	VDDIO	I/O
16	SDIO_DATA_CMD	SDIO Command Input.	VDDIO	I/O
17	SDIO_DATA_CLK	SDIO Clock Input.	VDDIO	I
18	SDIO_DATA0	SDIO Data Line 0.	VDDIO	I/O
19	SDIO_DATA1	SDIO Data Line 1.	VDDIO	I/O
20	GND	Ground.		GND
21	VIN_LDO_OUT	Internal Buck 1.2V voltage generation pin.	1.4V	O

The information contained herein is the exclusive property of AzureWave and shall not be distributed, reproduced, or disclosed in whole or in part without prior written permission of AzureWave.

22	VDDIO	VDDIO supply for WLAN and BT.	1.8V/3.3V	VCC
23	VIN_LDO	Internal Buck 1.2V voltage generation pin.	1.4V	I
24	LPO	External 32K or RTC clock.	0.2~3.3V	I
25	BT_PCM_OUT	PCM data output.	VDDIO	O
26	BT_PCM_CLK	PCM clock; can be master (output) or slave (input).	VDDIO	I/O
27	BT_PCM_IN	PCM data input.	VDDIO	I
28	BT_PCM_SYNC	PCM sync; can be master (output) or slave (input), or SLIMbus data.	VDDIO	I/O
29	STRAP_0	SDIO_PADVDDIO sel	Follow host configuration interface	I
30	NC	Floating Pin, No connect to anything.		Floating
31	GND	Ground.		GND
32	NC	Floating Pin, No connect to anything.		Floating
33	GND	Ground.		GND
34	BT_REG_ON	Used by PMU to power-up or power down the internal CYW4373 regulators used by the Bluetooth section. Also, when deasserted, this pin holds the Bluetooth section in reset. This pin has an internal 200 kΩ pull-down resistor that is enabled by default. It can be disabled through programming.	VDDIO	I
35	NC	Floating Pin, No connect to anything.		Floating
36	GND	Ground.		GND
37	NC	Floating Pin, No connect to anything.		Floating
38	NC	Floating Pin, No connect to anything.		Floating
39	RF_SW_CTRL5	Programmable RF switch control lines	3.3V	O
40	NC	Floating Pin, No connect to anything.		Floating
41	BT_UART_RTS	UART request-to-send. Active-low request-to-send signal for the HCI UART interface.	VDDIO	O
42	BT_UART_TXD	UART serial output. Serial data output for the HCI UART interface.	VDDIO	O
43	BT_UART_RXD	UART serial input. Serial data input for the HCI UART interface.	VDDIO	I
44	BT_UART_CTS	UART clear-to-send. Active-low clear-to-send signal for the HCI UART interface.	VDDIO	I

The information contained herein is the exclusive property of AzureWave and shall not be distributed, reproduced, or disclosed in whole or in part without prior written permission of AzureWave.

45	NC	Floating Pin, No connect to anything.		Floating
46	NC	Floating Pin, No connect to anything.		Floating
47	NC	Floating Pin, No connect to anything.		Floating

2.3 Host Configuration Interface Table

Scenario	WLAN	BT	Strap_0 Value
1	SDIO(1.8V)	UART	1
2	SDIO(3.3V)	UART	0

The information contained herein is the exclusive property of AzureWave and shall not be distributed, reproduced, or disclosed in whole or in part without prior written permission of AzureWave.

3. Electrical Characteristics

3.1 Absolute Maximum Ratings

Symbol	Parameter	Minimum	Typical	Maximum	Unit
VBAT	DC supply for the VBAT and PA driver supply	-0.5	-	5.5	V
VDDIO	DC supply voltage for digital I/O	-0.5	-	3.9	V
Tj	Maximum junction temperature	-	-	125	˚C

3.2 Recommended Operating Conditions

Symbol	Parameter	Minimum	Typical	Maximum	Unit
VBAT	Power supply for Internal Regulator	3.2	3.6	4.8	V
VDDIO	DC supply voltage for digital I/O	1.62	1.8/3.3	3.63	V

The information contained herein is the exclusive property of AzureWave and shall not be distributed, reproduced, or disclosed in whole or in part without prior written permission of AzureWave.

3.3 Digital IO Pin DC Characteristics

Symbol	Parameter	Minimum	Typical	Maximum	Unit
Digital I/O pins, VDDIO=1.8V					
V_{IH}	Input high voltage	0.65 × VDDIO	-	-	V
V_{IL}	Input low voltage	-	-	0.35 × VDDIO	V
V_{OH}	Output high voltage	VDDIO – 0.45	-	-	V
V_{OL}	Output Low Voltage	-	-	0.45	V
Digital I/O pins, VDDIO=3.3V					
V_{IH}	Input high voltage	2.00	-	-	V
V_{IL}	Input low voltage	-	-	0.80	V
V_{OH}	Output high voltage	VDDIO – 0.4	-	-	V
V_{OL}	Output low Voltage	-	-	0.40	V

The information contained herein is the exclusive property of AzureWave and shall not be distributed, reproduced, or disclosed in whole or in part without prior written permission of AzureWave.

3.4 Host Interface

3.4.1 SDIO Interface

SDIO Bus Timing (Default Mode)

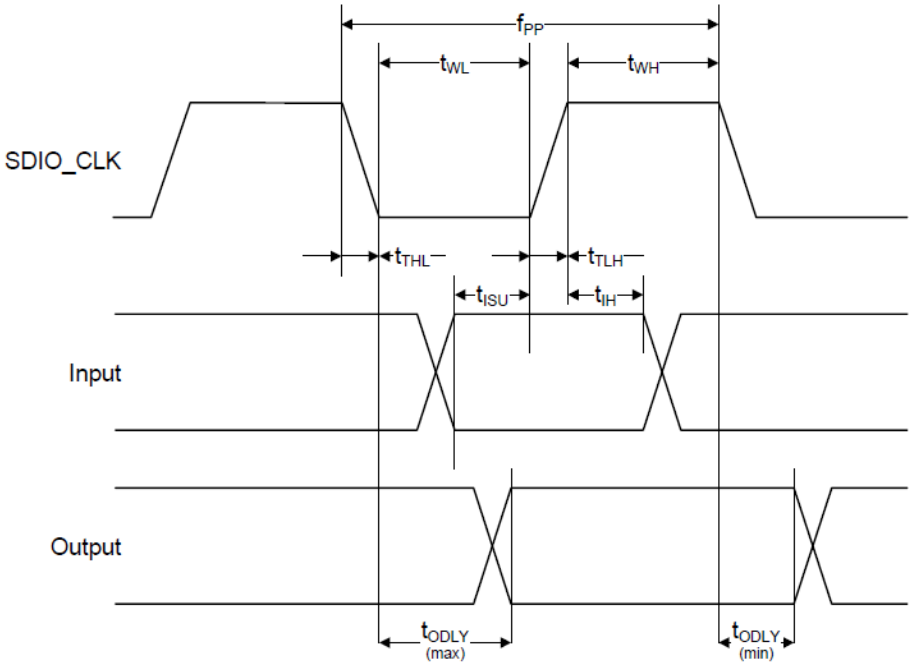

SDIO Bus Timing Parameters (Default Mode)

Parameter	Symbol	Minimum	Typical	Maximum	Unit
SDIO CLK (All values are referred to minimum VIH and maximum VIL)					
Frequency – Data Transfer mode	f_{PP}	0	–	25	MHz
Frequency – Identification mode	f_{OD}	0	–	400	kHz
Clock low time	t_{WL}	10	–	–	ns
Clock high time	t_{WH}	10	–	–	ns
Clock rise time	t_{TLH}	–	–	10	ns
Clock low time	t_{THL}	–	–	10	ns
Inputs: CMD, DAT (referenced to CLK)					
Input setup time	t_{ISU}	5	–	–	ns
Input hold time	t_{IH}	5	–	–	ns

The information contained herein is the exclusive property of AzureWave and shall not be distributed, reproduced, or disclosed in whole or in part without prior written permission of AzureWave.

Outputs: CMD, DAT (referenced to CLK)					
Output delay time – Data Transfer mode	t_{ODLY}	0	–	14	ns
Output delay time – Identification mode	t_{ODLY}	0	–	50	ns

The information contained herein is the exclusive property of AzureWave and shall not be distributed, reproduced, or disclosed in whole or in part without prior written permission of AzureWave.

SDIO Bus Timing (High-Speed Mode)

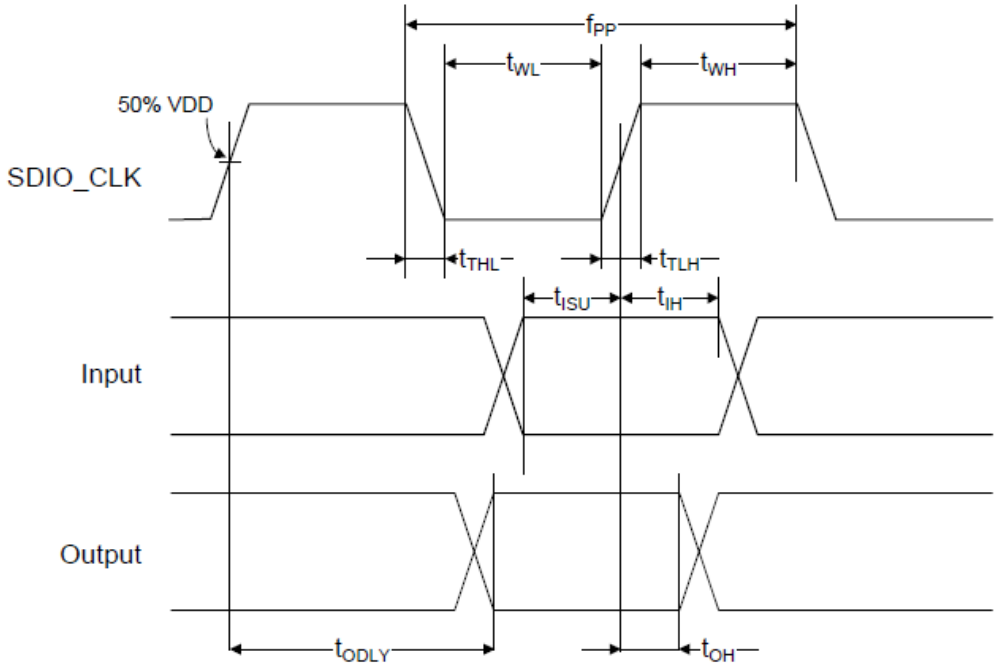

SDIO Bus Timing Parameters (High-Speed Mode)

Parameter	Symbol	Minimum	Typical	Maximum	Unit
SDIO CLK (all values are referred to minimum VIH and maximum VIL[b])					
Frequency – Data Transfer Mode	f_{PP}	0	–	50	MHz
Frequency – Identification Mode	f_{OD}	0	–	400	kHz
Clock low time	t_{WL}	7	–	–	ns
Clock high time	t_{WH}	7	–	–	ns
Clock rise time	t_{TLH}	–	–	3	ns
Clock low time	t_{THL}	–	–	3	ns
Inputs: CMD, DAT (referenced to CLK)					
Input setup Time	t_{ISU}	6	–	–	ns
Input hold Time	t_{IH}	2	–	–	ns
Outputs: CMD, DAT (referenced to CLK)					
Output delay time – Data Transfer Mode	t_{ODLY}	–	–	14	ns
Output hold time	t_{OH}	2.5	–	–	ns

The information contained herein is the exclusive property of AzureWave and shall not be distributed, reproduced, or disclosed in whole or in part without prior written permission of AzureWave.

Total system capacitance (each line)	CL	–	–	40	pF

The information contained herein is the exclusive property of AzureWave and shall not be distributed, reproduced, or disclosed in whole or in part without prior written permission of AzureWave.

3.4.2 UART Interface

The UART is a standard 4-wire interface (RX, TX, RTS, and CTS) with adjustable baud rates from 9600 bps to 4.0 Mbps. The interface features an automatic baud rate detection capability that returns a baud rate selection. Alternatively, the baud rate may be selected through a vendor-specific UART HCI command.

UART has a 1040-byte receive FIFO and a 1040-byte transmit FIFO to support EDR. Access to the FIFOs is conducted through the AHB interface through either DMA or the CPU. The UART supports the Bluetooth UART HCI specification: H4 and a custom Extended H4. The default baud rate is 115.2 Kbaud.

The AW-CM467-SUR UART can perform XON/XOFF flow control and includes hardware support for the Serial Line Input Protocol (SLIP).

It can also perform wake-on activity. For example, activity on the RX or CTS inputs can wake the chip from a sleep state.

Normally, the UART baud rate is set by a configuration record downloaded after device reset, or by automatic baud rate detection, and the host does not need to adjust the baud rate. Support for changing the baud rate during normal HCI UART operation is included through a vendor-specific command that allows the host to adjust the contents of the baud rate registers. The AW-CM467-SUR UARTs operate correctly with the host UART as long as the combined baud rate error of the two devices is within ±2%.

UART Interface Signals

PIN No.	Name	Description	Type
18	BT_UART_TXD	Bluetooth UART Serial Output. Serial data output for the HCI UART Interface	O
19	BT_UART_RXD	Bluetooth UART Series Input. Serial data input for the HCI UART Interface	I
21	BT_UART_RTS_N	Bluetooth UART Request-to-Send. Active-low request-to-send signal for the HCI UART interface	O
17	BT_UART_CTS_N	Bluetooth UART Clear-to-Send. Active-low clear-to-send signal for the HCI UART interface.	I

The information contained herein is the exclusive property of AzureWave and shall not be distributed, reproduced, or disclosed in whole or in part without prior written permission of AzureWave.

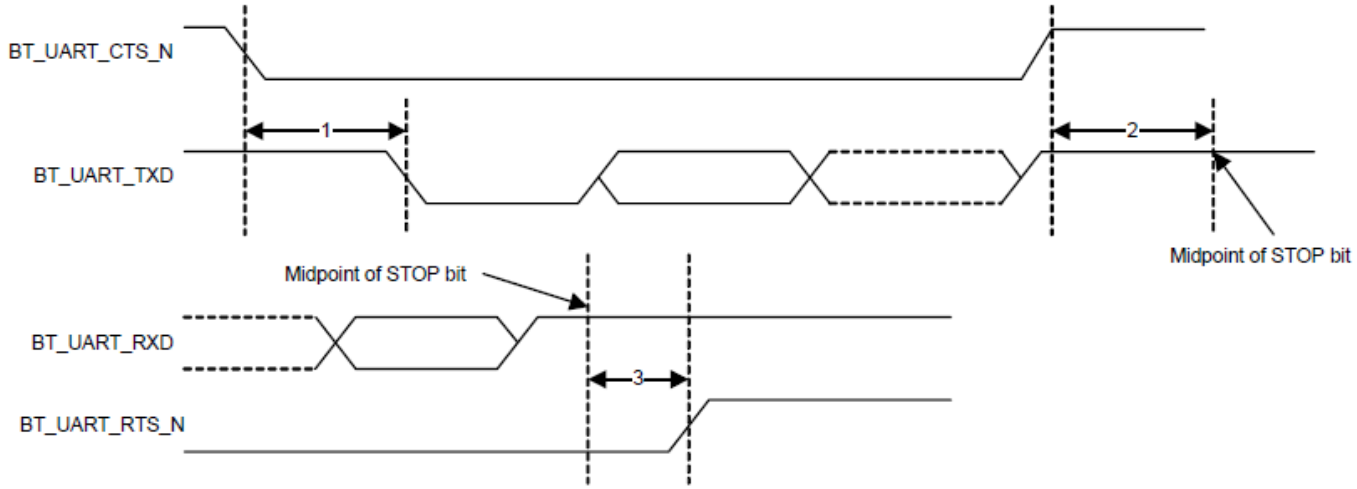

UART Timing

	Reference Characteristics	Minimum	Typical	Maximum	Unit
1	Delay time, BT_UART_CTS_N low to BT_UART_TXD valid	–	–	1.5	Bit periods
2	Setup time, BT_UART_CTS_N high before midpoint of stop bit	–	–	0.5	Bit periods
3	Delay time, midpoint of stop bit to BT_UART_RTS_N high	–	–	0.5	Bit periods

The information contained herein is the exclusive property of AzureWave and shall not be distributed, reproduced, or disclosed in whole or in part without prior written permission of AzureWave.

3.5 Power up Timing Sequence

The AW-CM467-SUR has three signals that allow the host to control power consumption by enabling or disabling the Bluetooth, WLAN, and internal regulator blocks. These signals are described below. Additionally, diagrams are provided to indicate proper sequencing of the signals for various operational states. The timing values indicated are minimum required values; longer delays are also acceptable.

Description of Control Signals

■ **WL_REG_ON**:

Used by the PMU to power up the WLAN section. It is also OR-gated with the BT_REG_ON input to control the internal AW-CM467-SUR regulators. When this pin is high, the regulators are enabled and the WLAN section is out of reset. When this pin is low the WLAN section is in reset. If both the BT_REG_ON and WL_REG_ON pins are low, the regulators are disabled.

■ **BT_REG_ON**:

Used by the PMU (OR-gated with WL_REG_ON) to power up the internal AW-CM467-SUR regulators. If both the BT_REG_ON and WL_REG_ON pins are low, the regulators are disabled. When this pin is low and WL_REG_ON is high, the BT section is in reset.

Note:

For both the WL_REG_ON and BT_REG_ON pins, there should be at least a 10 msec time delay between consecutive toggles (where both signals have been driven low). This is to allow time for the CBUCK regulator to discharge. If this delay is not followed, then there may be a VDDIO in-rush current on the order of 36 mA during the next PMU cold start.

The information contained herein is the exclusive property of AzureWave and shall not be distributed, reproduced, or disclosed in whole or in part without prior written permission of AzureWave.

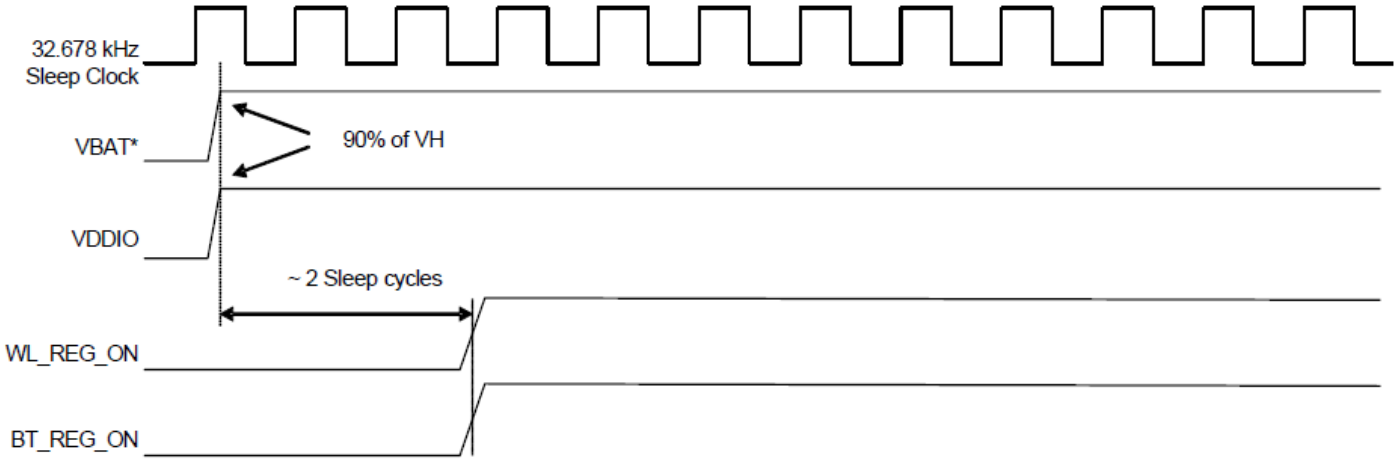

***Notes:**
1. VBAT should not rise 10%–90% faster than 40 microseconds.
2. VBAT should be up before or at the same time as VDDIO. VDDIO should NOT be present first or be held high before VBAT is high.

WLAN = ON, Bluetooth = ON

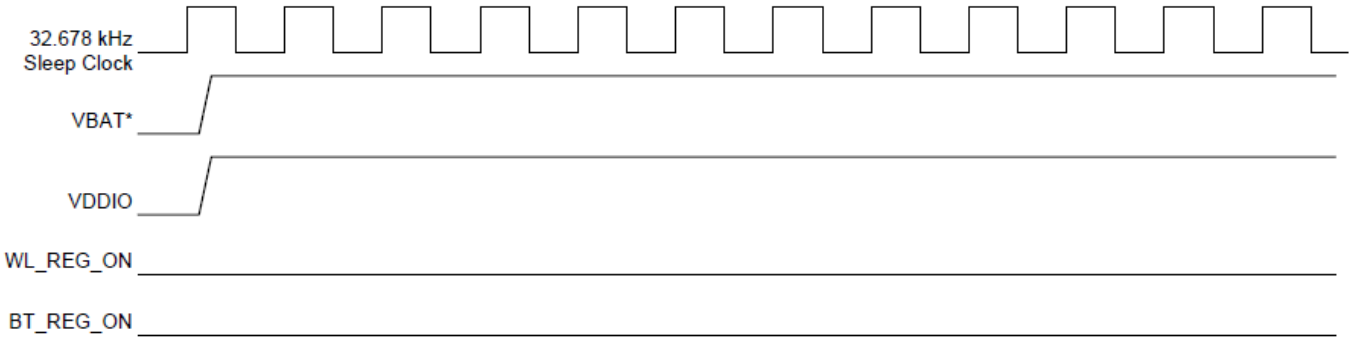

***Notes:**
1. VBAT should not rise 10%–90% faster than 40 microseconds.
2. VBAT should be up before or at the same time as VDDIO. VDDIO should NOT be present first or be held high before VBAT is high.

WLAN = OFF, Bluetooth = OFF

The information contained herein is the exclusive property of AzureWave and shall not be distributed, reproduced, or disclosed in whole or in part without prior written permission of AzureWave.

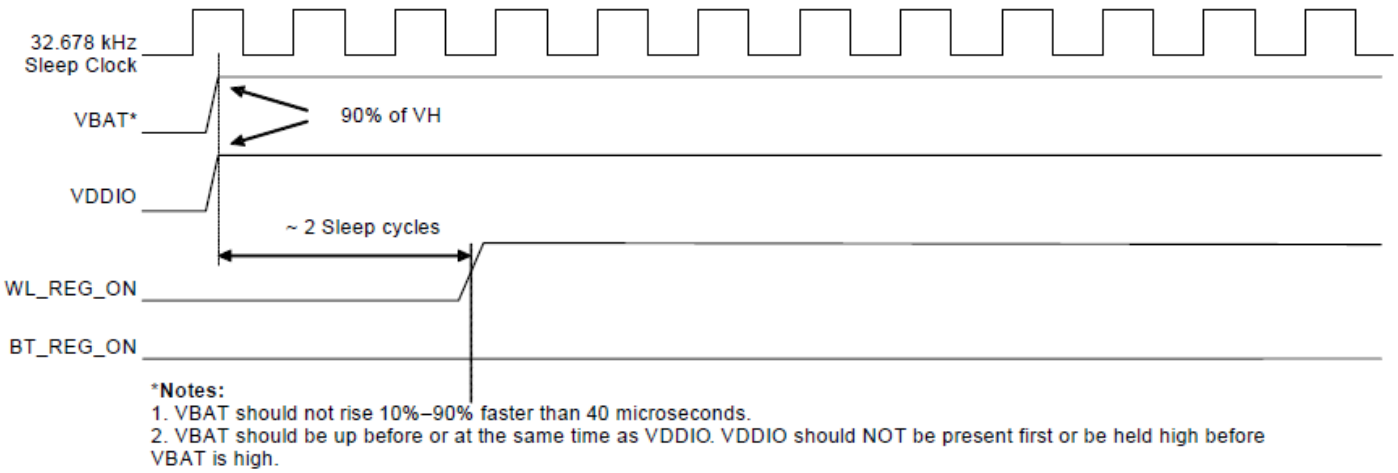

WLAN = ON, Bluetooth = OFF

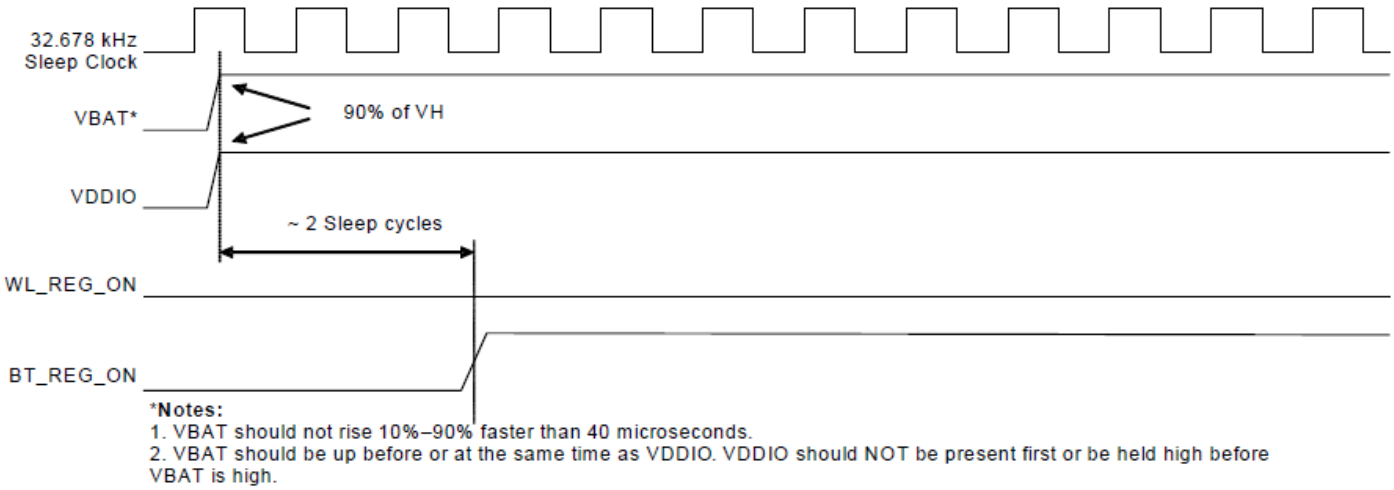

WLAN = OFF, Bluetooth = ON

The information contained herein is the exclusive property of AzureWave and shall not be distributed, reproduced, or disclosed in whole or in part without prior written permission of AzureWave.

3.6 Power Consumption*

3.6.1 WLAN

TBD

* The power consumption is based on Azurewave test environment, these data for reference only.

3.6.2 Bluetooth

TBD

* The power consumption is based on Azurewave test environment, these data for reference only.

The information contained herein is the exclusive property of AzureWave and shall not be distributed, reproduced, or disclosed in whole or in part without prior written permission of AzureWave.

4. Mechanical Information

4.1 Mechanical Drawing

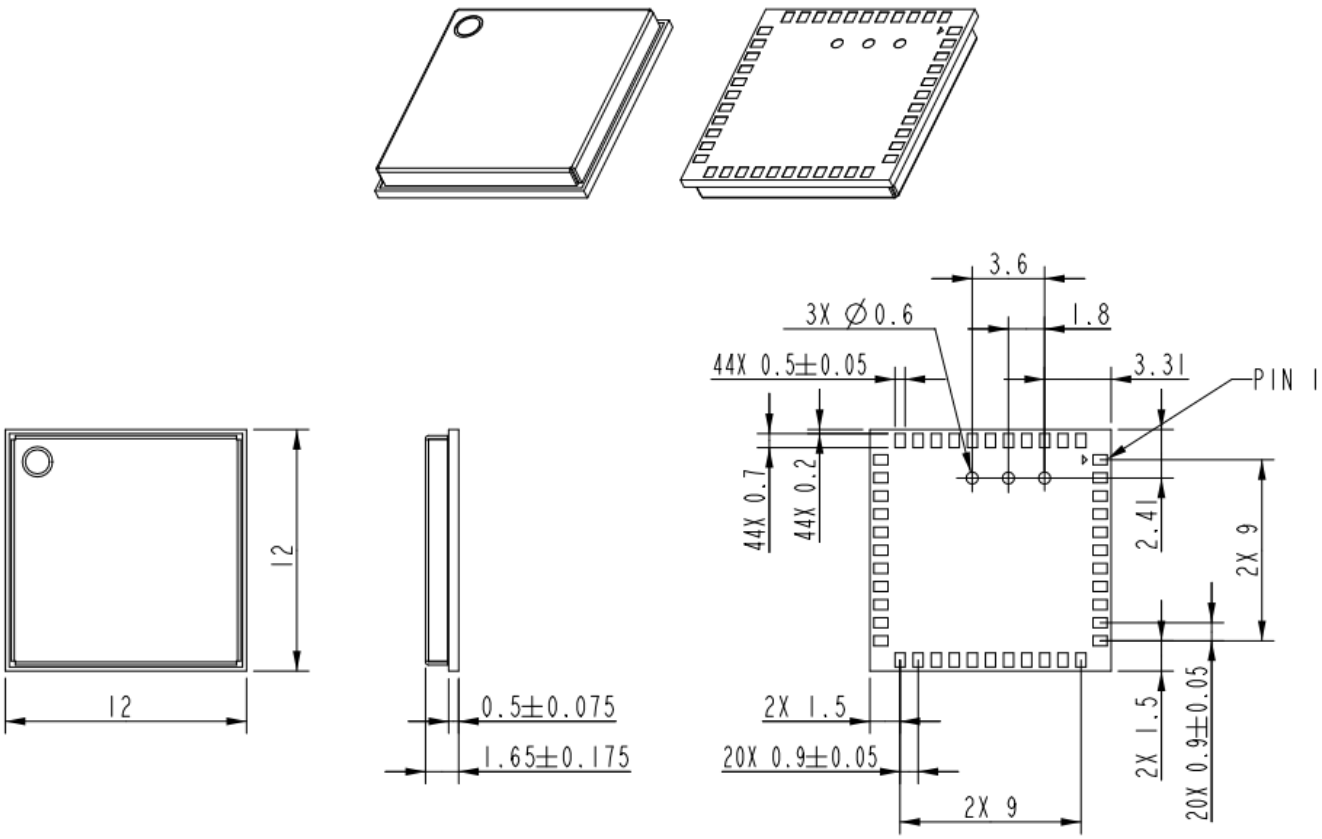

TOLERANCE UNLESS OTHERWISE SPECIFIED:±0.1mm

The information contained herein is the exclusive property of AzureWave and shall not be distributed, reproduced, or disclosed in whole or in part without prior written permission of AzureWave.

5. Packaging Information

1. One reel can pack 1,500pcs 12x12 LGA modules

2. One production label is pasted on the reel, one desiccant and one humidity indicator card are put on the reel

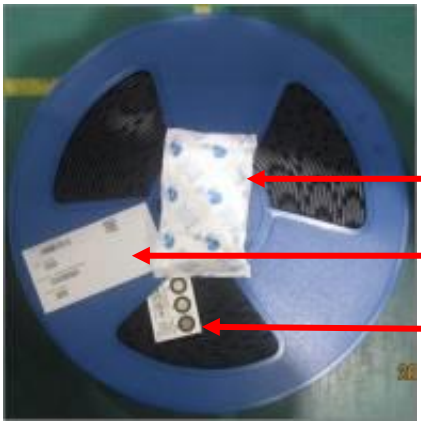

3. One reel is put into the anti-static moisture barrier bag, and then one label is pasted on the bag

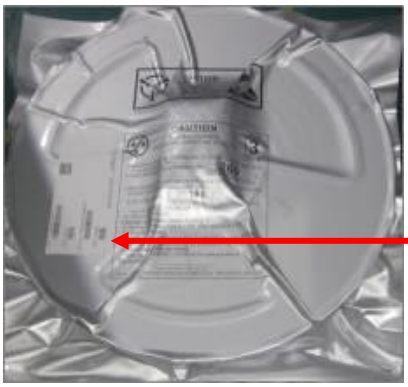

4. A bag is put into the anti-static pink bubble wrap

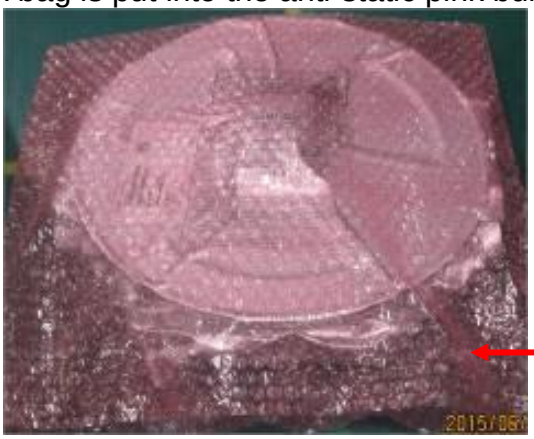

The information contained herein is the exclusive property of AzureWave and shall not be distributed, reproduced, or disclosed in whole or in part without prior written permission of AzureWave.

5. A bubble wrap is put into the inner box and then one label is pasted on the inner box

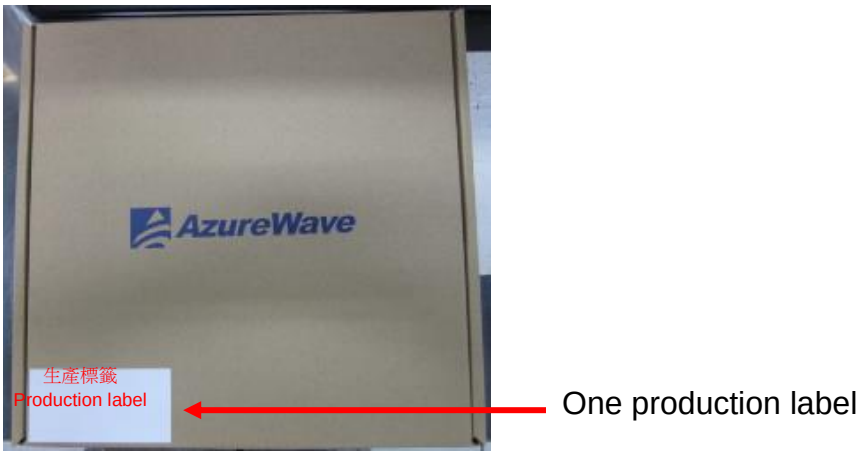

6. **5 inner boxes** could be put into one carton

7. Sealing the carton by AzureWave tape

The information contained herein is the exclusive property of AzureWave and shall not be distributed, reproduced, or disclosed in whole or in part without prior written permission of AzureWave.

8. One carton label and one box label are pasted on the carton. If one carton is not full, one balance label pasted on the carton

Example of carton label	AzureWave Technologies Inc. AzureWave P/N Customer: 由業務提供 Customer P/N: 由業務提供 Customer PO: 由業務提供 Description: AW-XXXXXX QTY: 1200 pcs C/N N.W. G.W. RoHS COMPLIANT
Example of box label	BOX0012018
Example of production label	P/N: D/C: 1309 PCK NO.: PCKNO0069097 QTY: 294 BAG SEAL DATE: _____

The information contained herein is the exclusive property of AzureWave and shall not be distributed, reproduced, or disclosed in whole or in part without prior written permission of AzureWave.

Example of balance label	

The information contained herein is the exclusive property of AzureWave and shall not be distributed, reproduced, or disclosed in whole or in part without prior written permission of AzureWave.